ITALSTYL

Le cornici estruse e gli angoli per pareti e soffitti *Extruded panel mouldings with corners*

Angolo - Corner : H 200 x 200 mm r 12,5

File : IA 745 LG

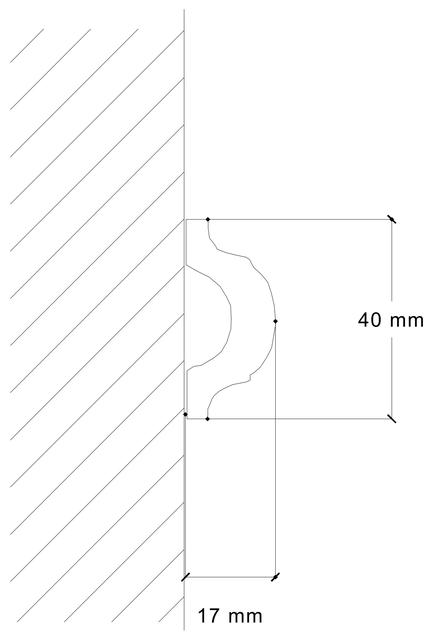

scala 1:1

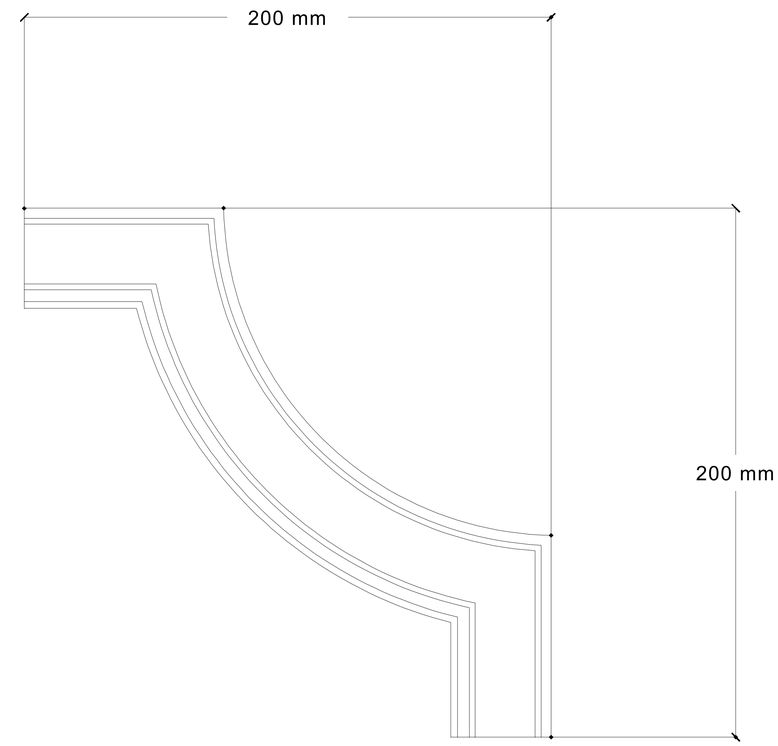

scala 1:2

Le caratteristiche tecniche indicate vengono fornite a titolo indicativo e potranno essere modificate senza preavviso. Non devono quindi essere considerate a scopo di specifica.
The given values are indicative and can be changed without notice. They cannot be considered like a state.
This lealfet and designs embodied within are protected by copyright law and international treaties. Unauthorized reproduction of the leaflet or any portion of it or reproduction of any of the designs embodied therein may result in severe civil penalties and will be prosecuted to the maximum.
All right reserved, Bovelacci Forlì Italy.

Bovelacci
via del Commercio, 5 47100 Forli - Italy
tel.+39-0543721386 fax +39-0543721127 www.bovelacci.it
e-mail: bovelacci@bovelacci .it